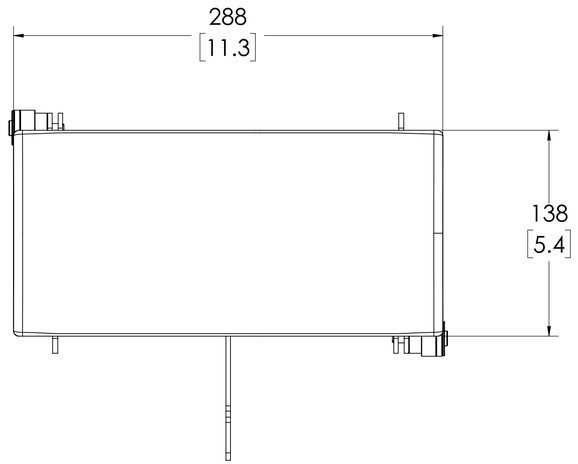

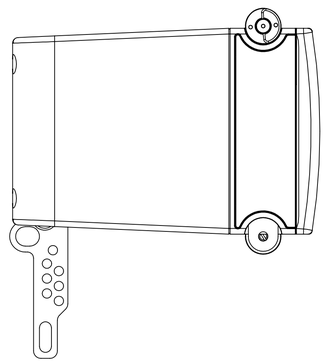

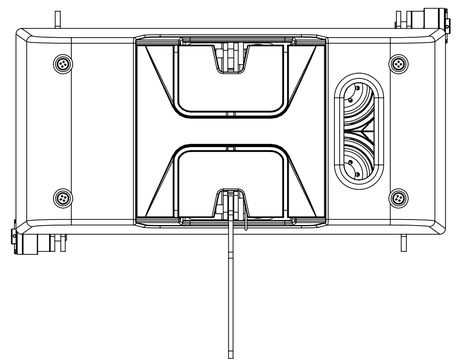

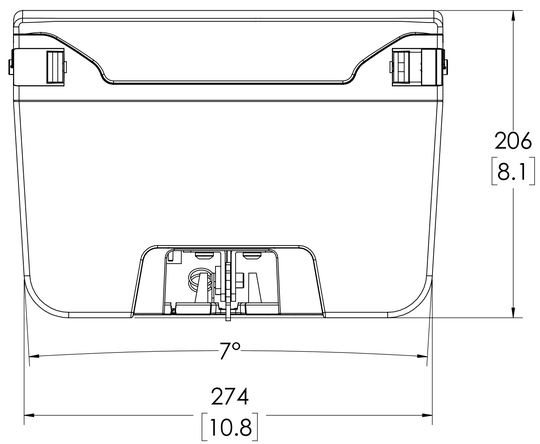

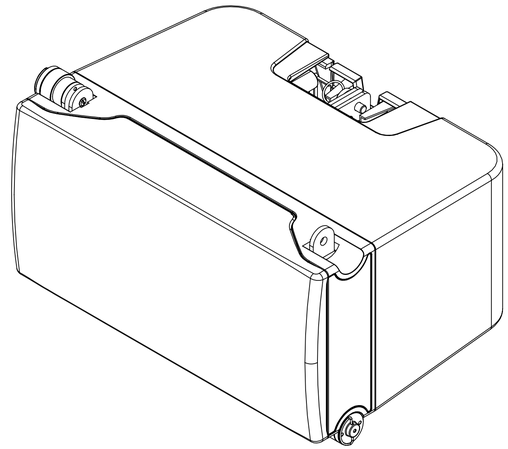

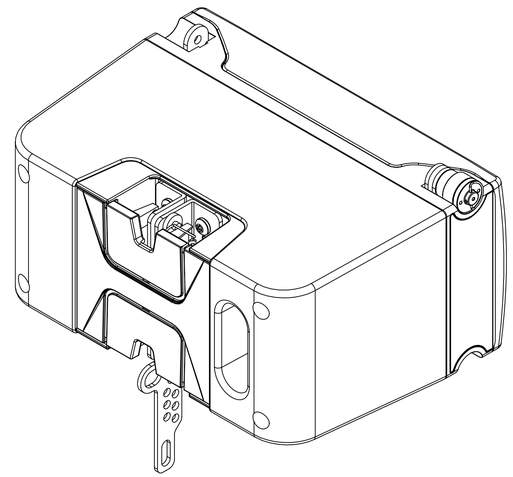

NOTES:
1. DIMENSIONS ARE IN MILLIMETERS OVER INCHES
2. WEIGHT APPROX 3.5kg [7.6lbs]

BOSE PROFESSIONAL

THIRD ANGLE PROJECTION

UNLESS OTHERWISE SPECIFIED INTERPRET THIS DRAWING PER ASME Y14.5M-1994

DESCRIPTION: MA3 MICRO ARRAY LOUDSPEAKER

SIZE	DOCUMENT NUMBER	VERSION
D	RFA02817-MKTCADS	A
SCALE: DO NOT SCALE	STATE: Production	SHEET: 1

APPROVALS: ALL SIGNATURES ARE ELECTRONICALLY STORED IN THE BOSE PROFESSIONAL PLM SYSTEM

NOTICE: BOSE PROFESSIONAL PROPRIETARY RIGHTS ARE INCLUDED HEREIN. THIS INFORMATION IS CONFIDENTIAL AND MAY NOT BE COPIED,TRANSFERRED, OR DISCLOSED EXCEPT AS AUTHORIZED BY BOSE PROFESSIONAL