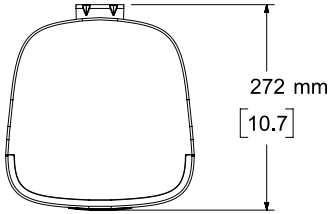

Top View

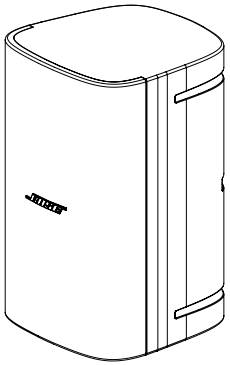

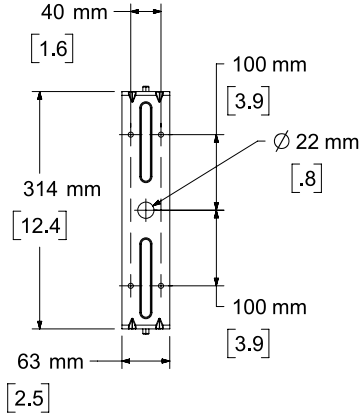

Rear View
BRACKET ONLY

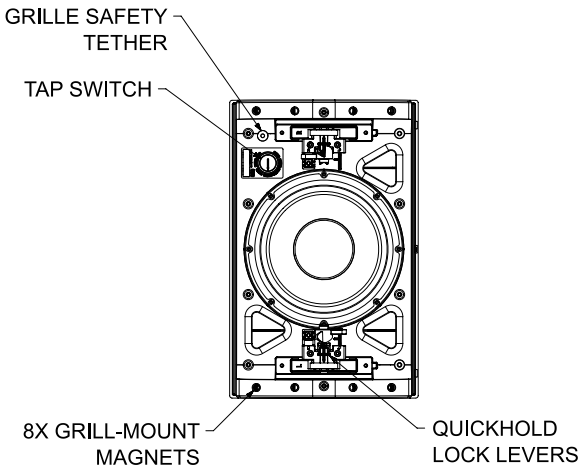

Front View
GRILLE REMOVED FOR CLARITY

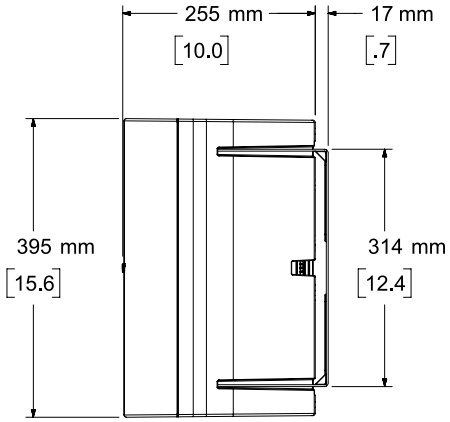

Right View
DIMENSIONS APPLY TO BOTH SIDES

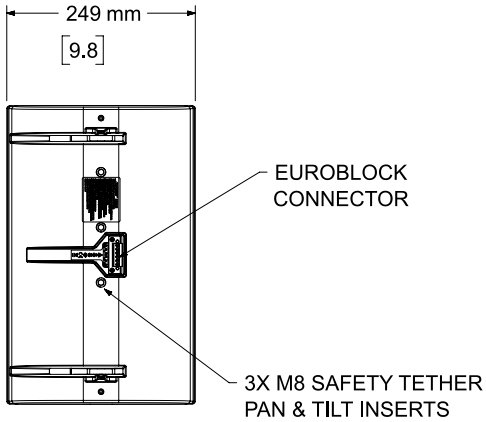

Rear View
BRACKET REMOVED FOR CLARITY

NOTES:
1. DIMENSIONS ARE IN MILLIMETERS OVER INCHES
2. WEIGHT APPROX 10.3kg [22.8lbs] (SPEAKER ONLY)
   WEIGHT W/BRACKET APPROX 11.3kg [24.9lbs]

BOSE PROFESSIONAL	THIRD ANGLE PROJECTION	DESCRIPTION: DESIGNMAX DM8S LOUDSPEAKER	
		CAGE CODE	DOCUMENT NUMBER: RF801332-MKTCADS	VERSION: 00.12
	UNLESS OTHERWISE SPECIFIED INTERPRET THIS DRAWING PER ASME Y14.5M-1997	DO NOT SCALE DRAWING	NOTICE: 2023 BOSE PROFESSIONAL THIS DRAWING MAY NOT BE COPIED, REPRODUCED, OR USED AS THE BASIS FOR MANUFACTURE OR SALE OF APPARATUS WITHOUT THE PRIOR WRITTEN AUTHORIZATION OF BOSE PROFESSIONAL.	