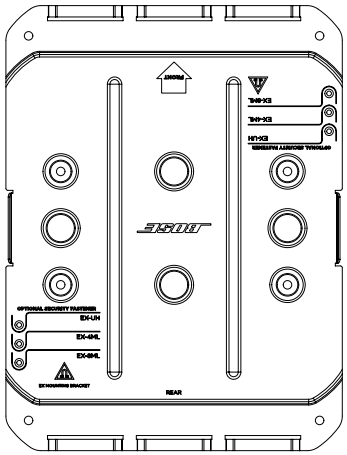

Top View

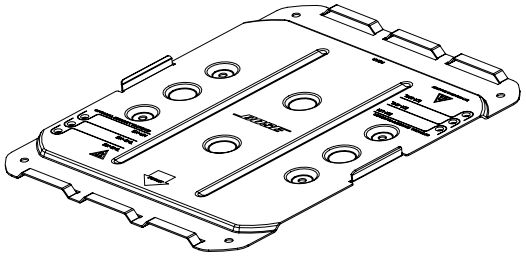

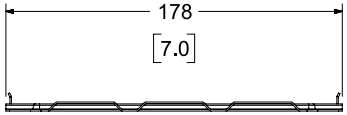

Front View

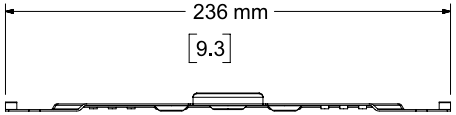

Right View

DIMENSIONS APPLY TO BOTH SIDES

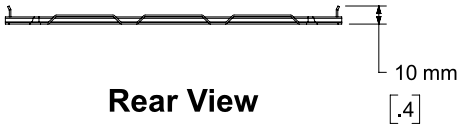

Rear View

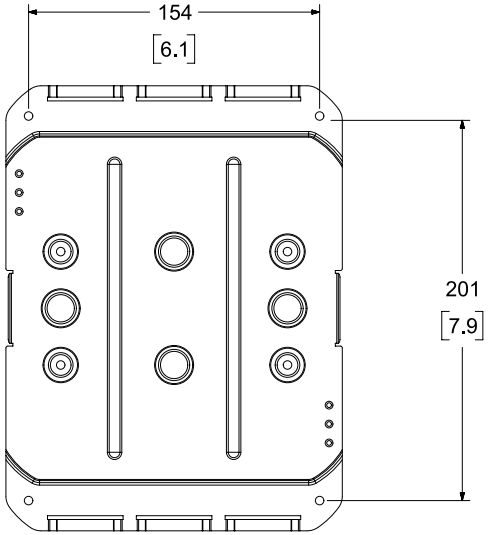

Bottom View

NOTES:
1. DIMENSIONS ARE IN MILIMETERS OVER INCHES

BOSE PROFESSIONAL	THIRD ANGLE PROJECTION	DESCRIPTION: EX MOUNTING BRACKET	
		CAGE CODE	DOCUMENT NUMBER: RF790080-MKTCADS	VERSION: 01.2
	UNLESS OTHERWISE SPECIFIED INTERPRET THIS DRAWING PER ASME Y14.5M-1997	DO NOT SCALE DRAWING	NOTICE: 2023 BOSE PROFESSIONAL. THIS DRAWING MAY NOT BE COPIED, REPRODUCED, OR USED AS THE BASIS FOR MANUFACTURE OR SALE OF APPARATUS WITHOUT THE PRIOR WRITTEN AUTHORIZATION OF BOSE PROFESSIONAL.