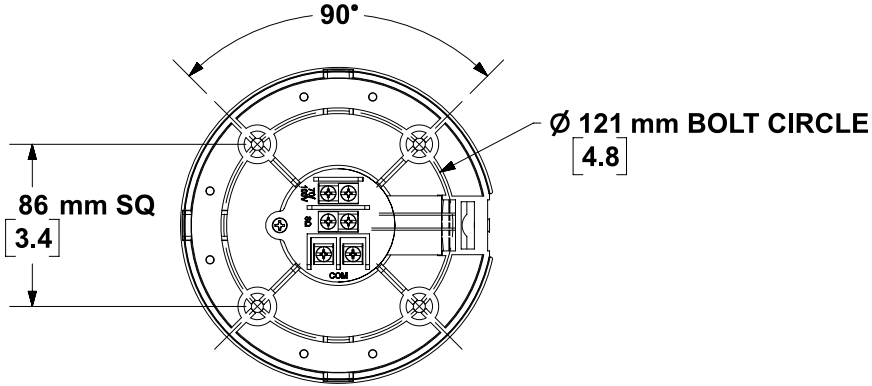

Back View

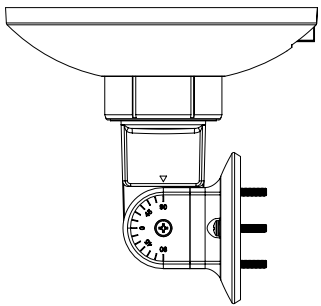

Front View

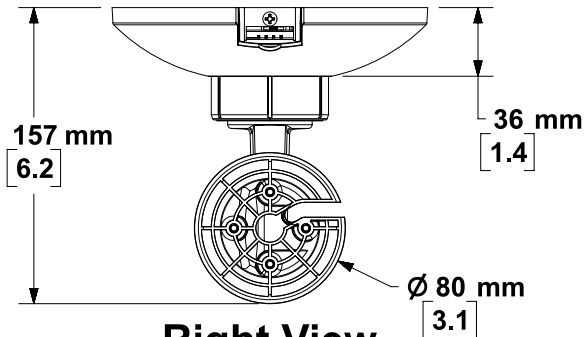

Right View