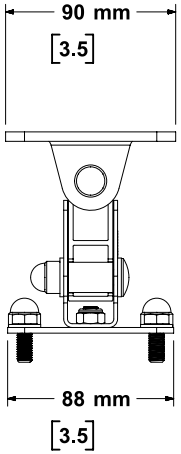

Top View

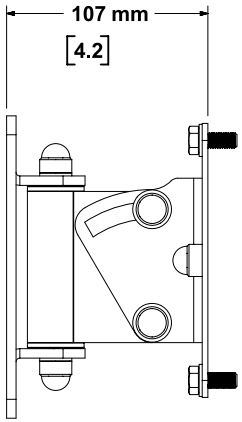

Left View

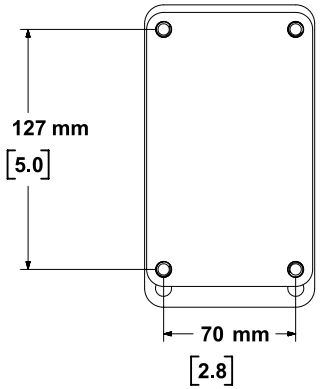

Front View

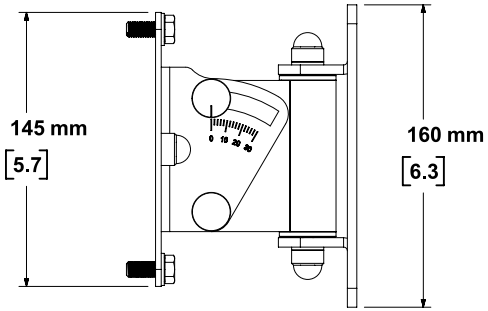

Right View

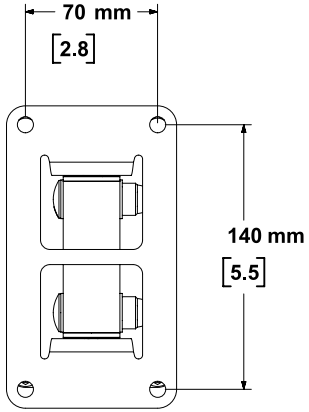

Back View

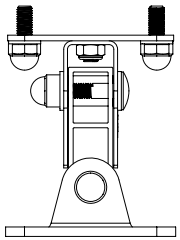

Bottom View