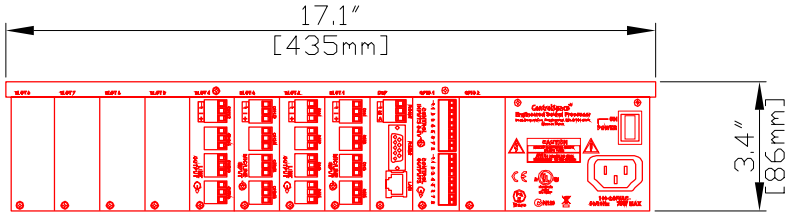

Rear View

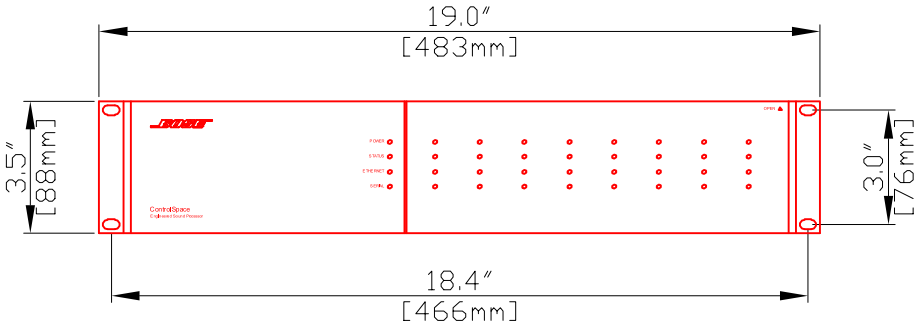

Front View

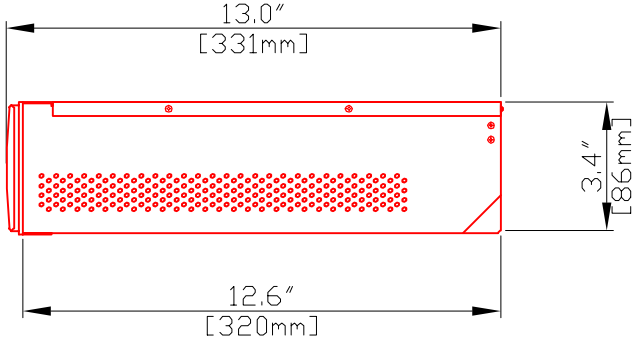

Side View